LED Safety Light – Model 527

8200151

Product Information

Description	Model 527 - Mine Shovel Rock Guard Kit
Height	171.45 mm / 6.75 in
Width	247.65 mm / 9.75 in
Depth	133.35 mm / 5.25 in
Shape	Rectangular
Shipping Weight	8.40 lbs / 3.81 kgs



Copyright © 2026 Invision Sales Pty. Ltd.

Product Dimensions

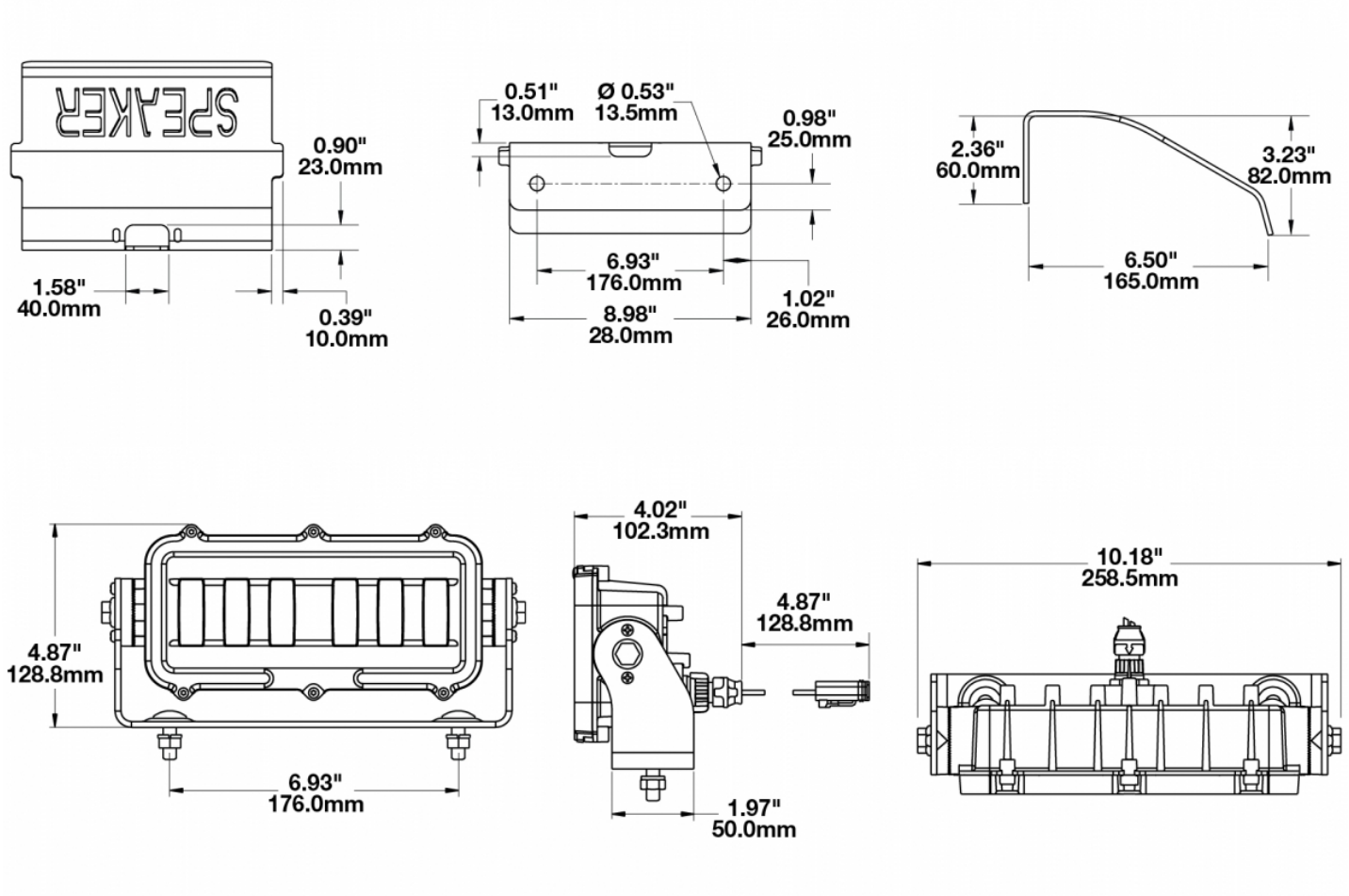

Additional Specifications

Pack Quantity	1

Copyright © 2026 Invision Sales Pty. Ltd.