LED Safety Light – Model 527

0551271

Product Information

Description	Model 527 - 12/24V LED Safety Light - Green 'Keep Out Zone'
Height	123.70 mm / 4.87 in
Width	258.57 mm / 10.18 in
Depth	102.11 mm / 4.02 in
Shape	Rectangular
Outer Lens Material	Glass
Outer Lens Color	Clear
Housing Material	Xenoy
Housing Color	Black
Mounting Hardware Description	(x2) M8-1.25 Mounting Bolt
Mounting Type	Universal Pedestal Mount
Minimum Operating Temperature	-40 °C
Maximum Operating Temperature	65 °C
Connector or Wiring	Integrated 2-Pin Deutsch Weatherproof Socket (DT04-2P)
Mating Connector	Integrated 2-Pin Deutsch Weatherproof Plug (DT06-2S)
Product Weight	2.60 lbs / 1.18 kgs
Shipping Weight	5.60 lbs / 2.54 kgs
Additional Information	Due to the chromaticity of the green light, the green Model 527 will easily shine through fog.



Copyright © 2026 Invision Sales Pty. Ltd.

Product Dimensions

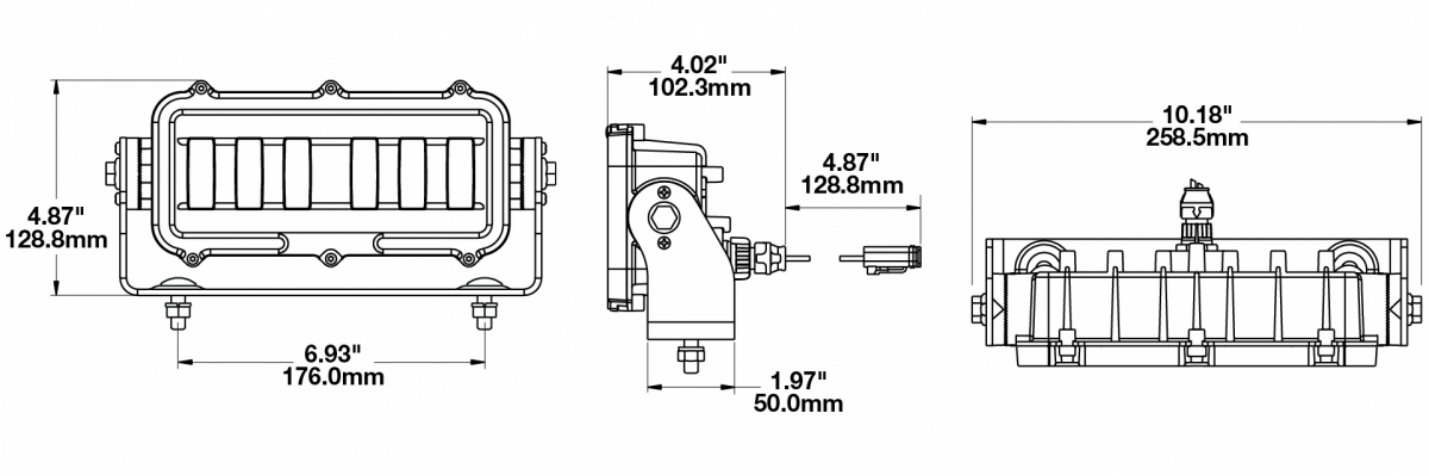

Electrical Specifications

Input Voltage	12-24V DC
Operating Voltage	10-32V DC
Red Wire	Positive
Black Wire	Negative
Current Draw	1.2A @ 12V DC .8A @ 24V DC

Photometric Specifications

Raw Lumen Output	1,500
Effective Lumen Output	590
Beam Pattern(s)	Forward Lighting - Spot Warning - Keep Out Zone

Copyright © 2026 Invision Sales Pty. Ltd.

Additional Specifications

IP Rating	IP69K
Warranty	Please refer to the Warranty Statement which is available for download on the website
Pack Quantity	1

Copyright © 2026 Invision Sales Pty. Ltd.