NX3 - LED Beacons

NX370

Product Information

Description	Amber LED Beacon - High Profile - 3 Point Mount
Height	123 mm / 4.84 in
Width	120 mm / 4.72 in
Depth	120 mm / 4.72 in
Shape	Round
Outer Lens Material	Polycarbonate
Housing Material	Die-Cast Aluminum
Housing Color	Black
Mounting Hardware Description	3 x Mounting Screws Included
Minimum Operating Temperature	-40 °C
Maximum Operating Temperature	65 °C
Connector or Wiring	500mm hardwire fly lead
Product Weight	1.4676173 lbs / 0.67 kgs



Copyright © 2026 Invision Sales Pty. Ltd.

Product Dimensions

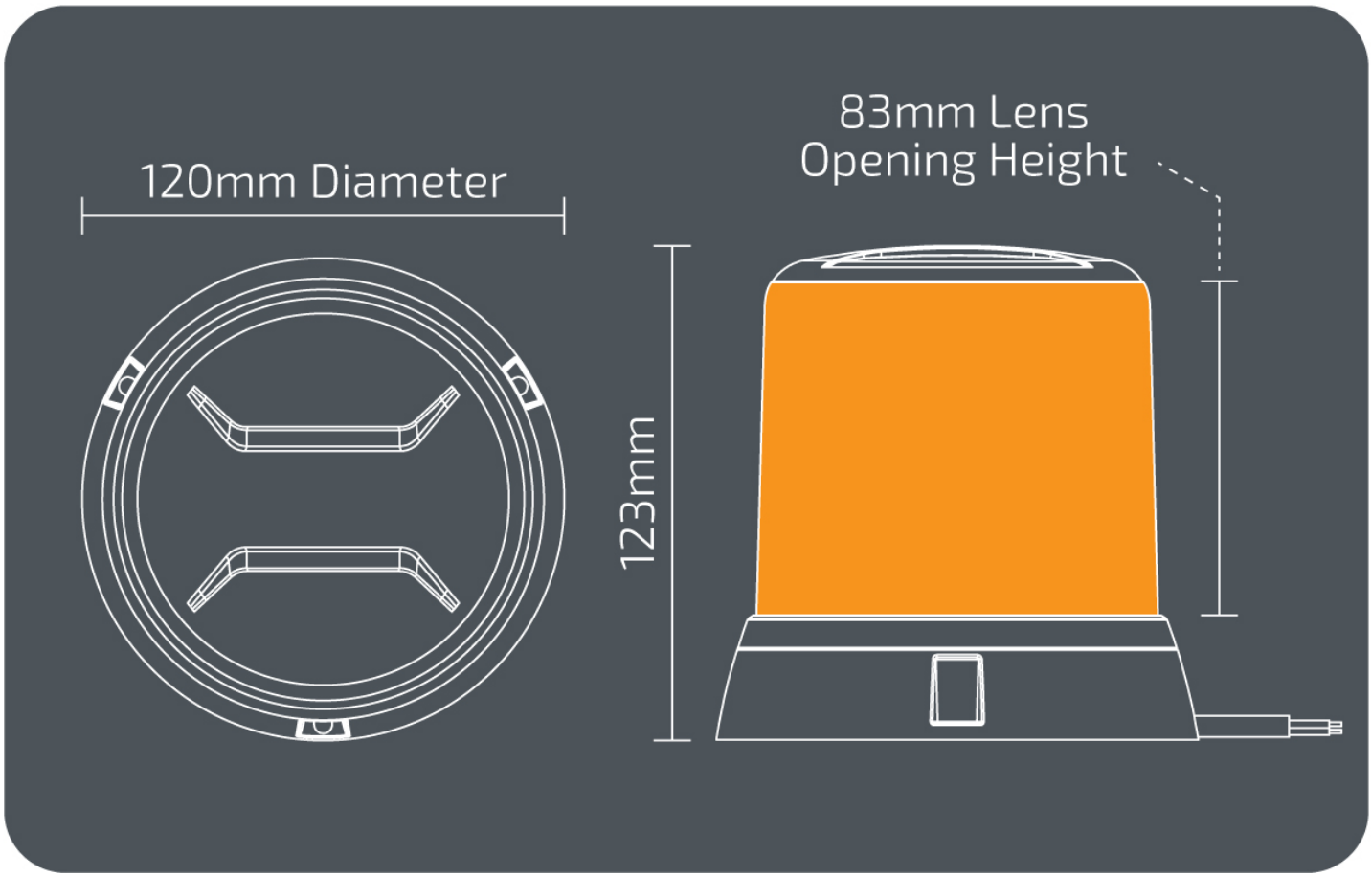

Electrical Specifications

Input Voltage	12-24V DC
Operating Voltage	12-24V DC
Wattage	16 W
Red Wire	Positive
Black Wire	Negative
Yellow Wire	Mode Select
Current Draw	1.7AA @ 13.8V DC 1.0AA @ 24V DC

Copyright © 2026 Invision Sales Pty. Ltd.

Additional Specifications

IP Rating	IP67
Warranty	3 Years
Certification	EMI: CISPR 25 Class 3, ECE R10 - Operation: ECE R65 Class 1 & SAEJ845 Class 1
Pack Quantity	1 Beacon

Installation & Application Information

Flash Modes

Note: This product does have mode memory

- Single Flash – 2.1Hz 126 Flash / Min – ECE R65 Class 1
- Single Flash – 1.25Hz 75 Flash / Min
- Double Flash
- Triple Flash
- Quadruple Flash
- Quintuple Flash
- Rotating
- Combo – Single / Triple Flash
- Combo – Single / Quintuple Flash
- Strobe
- Cruise / Solid On – 30% Brightness for night use

Copyright © 2026 Invision Sales Pty. Ltd.