LED Compact Work Light – Model 792

1603951

Product Information

Description	Model 792 - 12/24V LED Work Light - Panel Mount
Height	82.06 mm / 3.23 in
Width	98.80 mm / 3.89 in
Depth	43.40 mm / 1.71 in
Shape	Rectangular
Outer Lens Material	Polycarbonate
Outer Lens Color	Clear
Housing Color	Black
Minimum Operating Temperature	-40 °C
Maximum Operating Temperature	65 °C
Mating Connector	JAE Connector MX19A003S51 harness included with flying leads
Product Weight	0.40 lbs / 0.18 kgs
Shipping Weight	7.19 lbs / 3.26 kgs



Product Dimensions

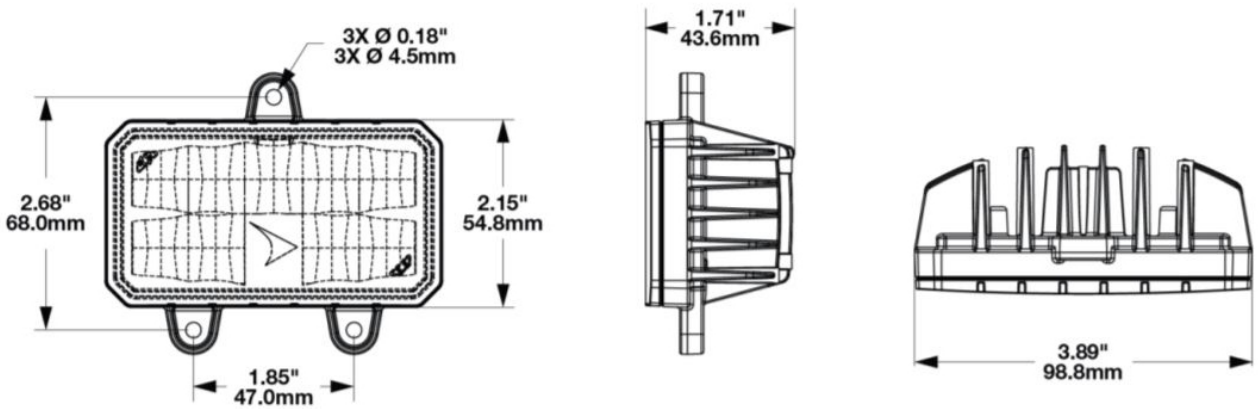

Copyright © 2026 Invision Sales Pty. Ltd.

Electrical Specifications

Input Voltage	12-24V DC
Operating Voltage	9-30V DC
Transient Spike Protection	330V Peak @ 1 HZ-100 Pulses
Red Wire	Power
Black Wire	Ground
Current Draw	2.2A @ 12V DC (Power) 1.0A @ 24V DC (Power)

Photometric Specifications

Raw Lumen Output	3630
Effective Lumen Output	2000
Candela Output	2900
Nominal LED Color Temperature	5000 K
Beam Pattern(s)	Forward Lighting - Flood (Standard)

Additional Specifications

IP Rating	IPIP67 & IP69K
Warranty	Please refer to the Warranty Statement which is available for download on the website
Pack Quantity	1

Copyright © 2026 Invision Sales Pty. Ltd.