LED Headlights – Model 8900 EVO-X

0562731

Product Information

Description	8900 EVO X - ECE LED Head Lamp Insert 12-24V High/Low & Park - Chrome
Height	142.00 mm / 5.59 in
Width	200.00 mm / 7.87 in
Depth	77.9 mm / 3.07 in
Shape	Rectangular
Outer Lens Material	Hardcoated Polycarbonate
Outer Lens Color	Clear
Housing Material	Polycarbonate
Housing Color	Black
Bezel Color	Chrome
Retrofits	2B1 5" x 7" Headlights
Minimum Operating Temperature	-40 °C
Maximum Operating Temperature	65 °C
Connector or Wiring	Integrated 6-pin Deutsch
Mating Connector	Deutsch DT06-6S

Copyright © 2026 Invision Sales Pty. Ltd.

Product Dimensions

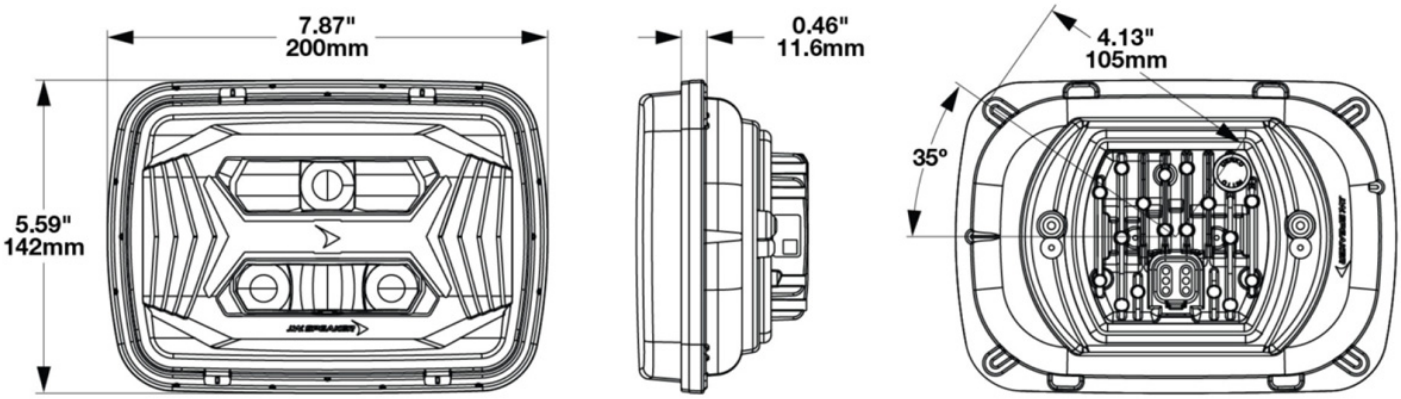

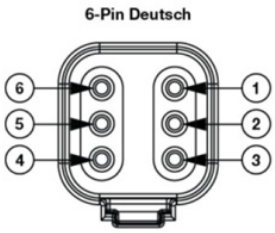

PIN	FUNCTION
PIN 1	Ground
PIN 2	Low Beam
PIN 3	High Beam
PIN 4	Front Position
PIN 5	-
PIN 6	-

Electrical Specifications

Input Voltage	12-24V DCV DC
Operating Voltage	9-32V DCV DC
Current Draw	2.09A @ 12V DC (Low Beam) 1.13A @ 24V DC (Low Beam) 4.52A @ 12V DC (High Beam) 2.21A @ 24V DC (High Beam) 0.26A @ 12V DC (Front Position) 0.15A @ 24V DC (Front Position)

Copyright © 2026 Invision Sales Pty. Ltd.

Photometric Specifications

Raw Lumen Output	3,740 (High beam), 2,330 (Low Beam)
Effective Lumen Output	1,420 (High Beam), 735 (Low beam)
Candela Output	62,000
Nominal LED Color Temperature	5700 K
Beam Pattern(s)	Forward Lighting - High Beam (ECE) Forward Lighting - Low Beam (ECE Left Hand) Signalization - Front Position

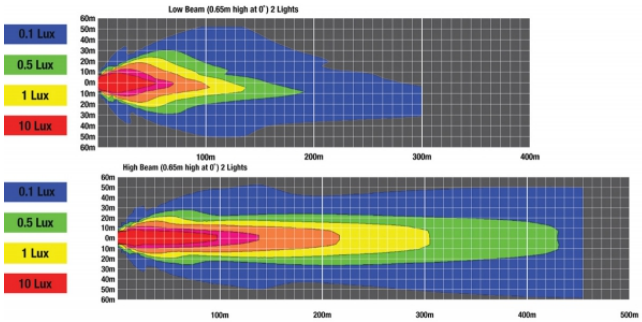

Additional Specifications

IP Rating	IP67, IP69K
Warranty	Please refer to the Warranty Statement which is available for download on the website
Pack Quantity	1

Copyright © 2026 Invision Sales Pty. Ltd.